Centre No.						Paper Reference							Surname	Initial(s)
Candidate No.						6	6	7	8	/	0	1	Signature	

Paper Reference(s)

6678/01

Edexcel GCE

Mechanics M2

Advanced/Advanced Subsidiary

Thursday 29 January 2009 – Morning

Time: 1 hour 30 minutes

Examiner's use only

Team Leader's use only

Question Number	Leave Blank
1	
2	
3	
4	
5	
6	
7	
Total	

Materials required for examination
Mathematical Formulae (Green)

Items included with question papers
Nil

Candidates may use any calculator allowed by the regulations of the Joint Council for Qualifications. Calculators must not have the facility for symbolic algebra manipulation, differentiation and integration, or have retrievable mathematical formulae stored in them.

Instructions to Candidates

In the boxes above, write your centre number, candidate number, your surname, initials and signature.
Check that you have the correct question paper.
Answer ALL the questions.
You must write your answer for each question in the space following the question.
Whenever a numerical value of g is required, take $g = 9.8$ m s^{-2}.
When a calculator is used, the answer should be given to an appropriate degree of accuracy.

Information for Candidates

A booklet 'Mathematical Formulae and Statistical Tables' is provided.
Full marks may be obtained for answers to ALL questions.
The marks for individual questions and the parts of questions are shown in round brackets: e.g. **(2)**.
There are 7 questions in this question paper. The total mark for this paper is 75.
There are 24 pages in this question paper. Any blank pages are indicated.

Advice to Candidates

You must ensure that your answers to parts of questions are clearly labelled.
You should show sufficient working to make your methods clear to the examiner.
Answers without working may not gain full credit.

This publication may be reproduced only in accordance with Edexcel Limited copyright policy.
©2009 Edexcel Limited.

Printer's Log. No.
N30083A
W850/R6678/57570 3/3/3/3

N 3 0 0 8 3 A 0 1 2 4

Turn over

edexcel
advancing learning, changing lives

Leave blank

1. A car of mass 1500 kg is moving up a straight road, which is inclined at an angle θ to the horizontal, where $\sin\theta = \frac{1}{14}$. The resistance to the motion of the car from non-gravitational forces is constant and is modelled as a single constant force of magnitude 650 N. The car's engine is working at a rate of 30 kW.

Find the acceleration of the car at the instant when its speed is 15 m s^{-1}.

(5)

Leave blank

2.

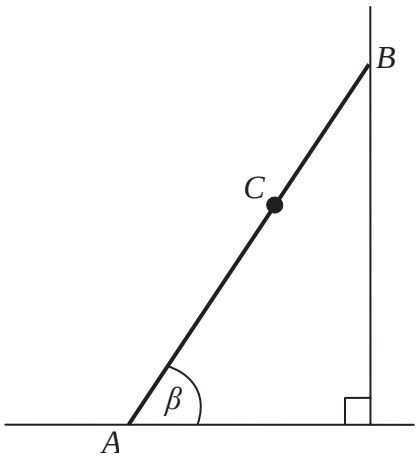

Figure 1

Figure 1 shows a ladder AB, of mass 25 kg and length 4 m, resting in equilibrium with one end A on rough horizontal ground and the other end B against a smooth vertical wall. The ladder is in a vertical plane perpendicular to the wall. The coefficient of friction between the ladder and the ground is $\frac{11}{25}$. The ladder makes an angle β with the ground. When Reece, who has mass 75 kg, stands at the point C on the ladder, where $AC = 2.8$ m, the ladder is on the point of slipping. The ladder is modelled as a uniform rod and Reece is modelled as a particle.

(a) Find the magnitude of the frictional force of the ground on the ladder.

(3)

(b) Find, to the nearest degree, the value of β.

(6)

(c) State how you have used the modelling assumption that Reece is a particle.

(1)

N 3 0 0 8 3 A 0 4 2 4

Leave blank

Question 2 continued

Leave blank

3. A block of mass 10 kg is pulled along a straight horizontal road by a constant horizontal force of magnitude 70 N in the direction of the road. The block moves in a straight line passing through two points A and B on the road, where $AB = 50$ m. The block is modelled as a particle and the road is modelled as a rough plane. The coefficient of friction between the block and the road is $\frac{4}{7}$.

(a) Calculate the work done against friction in moving the block from A to B.

(4)

The block passes through A with a speed of 2 m s^{-1}.

(b) Find the speed of the block at B.

(4)

N 3 0 0 8 3 A 0 8 2 4

Leave blank

4. A particle P moves along the x-axis in a straight line so that, at time t seconds, the velocity of P is v m s^{-1}, where

$$v = \begin{cases} 10t - 2t^2, & 0 \leqslant t \leqslant 6, \\ \dfrac{-432}{t^2}, & t > 6. \end{cases}$$

At $t = 0$, P is at the origin O. Find the displacement of P from O when

(a) $t = 6$,

(3)

(b) $t = 10$.

(5)

N 3 0 0 8 3 A 0 1 0 2 4

Leave blank

Question 4 continued

Q4

(Total 8 marks)

N 3 0 0 8 3 A 0 1 1 2 4

Turn over

Leave blank

5.

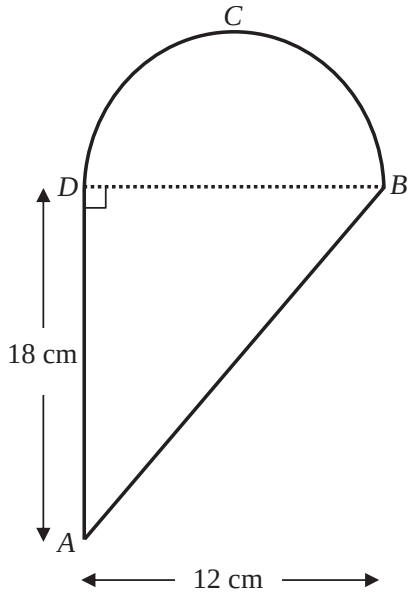

Figure 2

A uniform lamina *ABCD* is made by joining a uniform triangular lamina *ABD* to a uniform semi-circular lamina *DBC*, of the same material, along the edge *BD*, as shown in Figure 2. Triangle *ABD* is right-angled at *D* and *AD* = 18 cm. The semi-circle has diameter *BD* and *BD* = 12 cm.

(a) Show that, to 3 significant figures, the distance of the centre of mass of the lamina *ABCD* from *AD* is 4.69 cm.

(4)

Given that the centre of mass of a uniform semicircular lamina, radius r, is at a distance $\frac{4r}{3\pi}$ from the centre of the bounding diameter,

(b) find, in cm to 3 significant figures, the distance of the centre of mass of the lamina *ABCD* from *BD*.

(4)

The lamina is freely suspended from *B* and hangs in equilibrium.

(c) Find, to the nearest degree, the angle which *BD* makes with the vertical.

(4)

N 3 0 0 8 3 A 0 1 2 2 4

Leave blank

Question 5 continued

Leave blank

6.

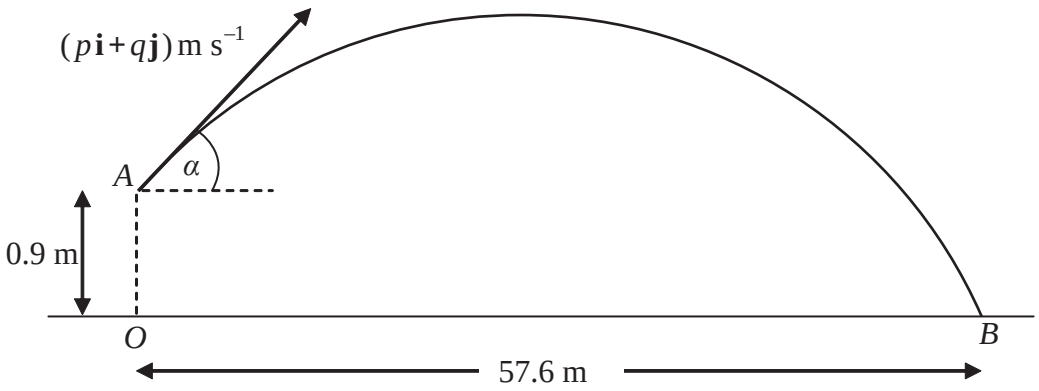

Figure 3

A cricket ball is hit from a point A with velocity of $(p\mathbf{i} + q\mathbf{j})$ m s^{-1}, at an angle α above the horizontal. The unit vectors **i** and **j** are respectively horizontal and vertically upwards. The point A is 0.9 m vertically above the point O, which is on horizontal ground.

The ball takes 3 seconds to travel from A to B, where B is on the ground and $OB = 57.6$ m, as shown in Figure 3. By modelling the motion of the cricket ball as that of a particle moving freely under gravity,

(a) find the value of p,

(2)

(b) show that $q = 14.4$,

(3)

(c) find the initial speed of the cricket ball,

(2)

(d) find the exact value of $\tan \alpha$.

(1)

(e) Find the length of time for which the cricket ball is at least 4 m above the ground.

(6)

(f) State an additional physical factor which may be taken into account in a refinement of the above model to make it more realistic.

(1)

N 3 0 0 8 3 A 0 1 6 2 4

Leave blank

Question 6 continued

Leave blank

7. A particle P of mass $3m$ is moving in a straight line with speed $2u$ on a smooth horizontal table. It collides directly with another particle Q of mass $2m$ which is moving with speed u in the opposite direction to P. The coefficient of restitution between P and Q is e.

(a) Show that the speed of Q immediately after the collision is $\frac{1}{5}(9e + 4)u$.

(5)

The speed of P immediately after the collision is $\frac{1}{2}u$.

(b) Show that $e = \frac{1}{4}$.

(4)

The collision between P and Q takes place at the point A. After the collision Q hits a smooth fixed vertical wall which is at right-angles to the direction of motion of Q. The distance from A to the wall is d.

(c) Show that P is a distance $\frac{3}{5}d$ from the wall at the instant when Q hits the wall.

(4)

Particle Q rebounds from the wall and moves so as to collide directly with particle P at the point B. Given that the coefficient of restitution between Q and the wall is $\frac{1}{5}$,

(d) find, in terms of d, the distance of the point B from the wall.

(4)

Leave blank

Question 7 continued