Please check the examination details below before entering your candidate information

Candidate surname	Other names

Pearson Edexcel Level 3 GCE

Centre Number | Candidate Number

Friday 14 June 2019

Afternoon | Paper Reference **9MA0-31**

Mathematics

Advanced

Paper 31: Statistics

You must have:
Mathematical Formulae and Statistical Tables, calculator

Total Marks

Candidates may use any calculator allowed by Pearson regulations. Calculators must not have the facility for symbolic algebra manipulation, differentiation and integration, or have retrievable mathematical formulae stored in them.

Instructions

- Use **black** ink or ball-point pen.
- If pencil is used for diagrams/sketches/graphs it must be dark (HB or B).
- **Fill in the boxes** at the top of this page with your name, centre number and candidate number.
- Answer **all** questions and ensure that your answers to parts of questions are clearly labelled.
- Answer the questions in the spaces provided – *there may be more space than you need.*
- You should show sufficient working to make your methods clear. Answers without working may not gain full credit.
- Answers should be given to three significant figures unless otherwise stated.

Information

- A booklet 'Mathematical Formulae and Statistical Tables' is provided.
- The total mark for this part of the examination is 50. There are 5 questions.
- The marks for **each** question are shown in brackets – *use this as a guide as to how much time to spend on each question.*

Advice

- Read each question carefully before you start to answer it.
- Try to answer every question.
- Check your answers if you have time at the end.

Turn over

©2019 Pearson Education Ltd.
1/1/1/1/

P 6 3 3 5 8 A 0 1 2 0

Pearson

Answer ALL questions. Write your answers in the spaces provided.

1. Three bags, A, B and C, each contain 1 red marble and some green marbles.

Bag A contains 1 red marble and 9 green marbles only
Bag B contains 1 red marble and 4 green marbles only
Bag C contains 1 red marble and 2 green marbles only

Sasha selects at random one marble from bag A.
If he selects a red marble, he stops selecting.
If the marble is green, he continues by selecting at random one marble from bag B.
If he selects a red marble, he stops selecting.
If the marble is green, he continues by selecting at random one marble from bag C.

(a) Draw a tree diagram to represent this information.
(2)

(b) Find the probability that Sasha selects 3 green marbles.
(2)

(c) Find the probability that Sasha selects at least 1 marble of each colour.
(2)

(d) Given that Sasha selects a red marble, find the probability that he selects it from bag B.
(2)

DO NOT WRITE IN THIS AREA
DO NOT WRITE IN THIS AREA
DO NOT WRITE IN THIS AREA

DO NOT WRITE IN THIS AREA

DO NOT WRITE IN THIS AREA

DO NOT WRITE IN THIS AREA

Question 1 continued

Question 1 continued

DO NOT WRITE IN THIS AREA

DO NOT WRITE IN THIS AREA

DO NOT WRITE IN THIS AREA

DO NOT WRITE IN THIS AREA

DO NOT WRITE IN THIS AREA

DO NOT WRITE IN THIS AREA

Question 1 continued

(Total for Question 1 is 8 marks)

2.

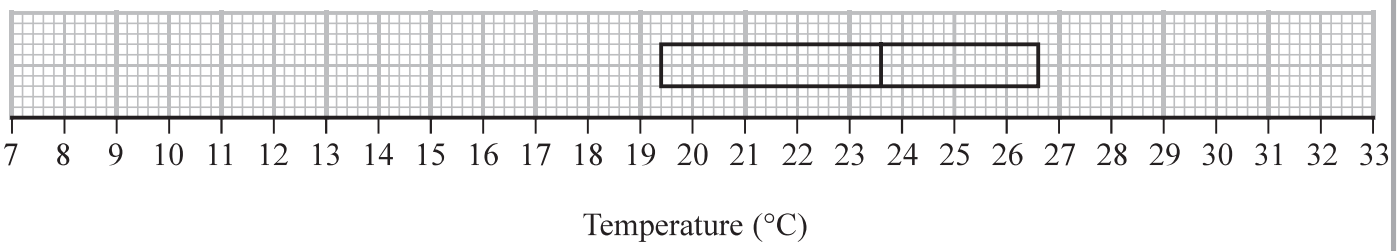

Figure 1

The partially completed box plot in Figure 1 shows the distribution of daily mean air temperatures using the data from the large data set for Beijing in 2015

An outlier is defined as a value
more than 1.5 × IQR below Q_1 or
more than 1.5 × IQR above Q_3

The three lowest air temperatures in the data set are 7.6 °C, 8.1 °C and 9.1 °C
The highest air temperature in the data set is 32.5 °C

(a) Complete the box plot in Figure 1 showing clearly any outliers.

(4)

(b) Using your knowledge of the large data set, suggest from which month the two outliers are likely to have come.

(1)

Using the data from the large data set, Simon produced the following summary statistics for the daily mean air temperature, x °C, for Beijing in 2015

$$n = 184 \qquad \sum x = 4153.6 \qquad S_{xx} = 4952.906$$

(c) Show that, to 3 significant figures, the standard deviation is 5.19 °C

(1)

Simon decides to model the air temperatures with the random variable

$$T \sim N(22.6, 5.19^2)$$

(d) Using Simon's model, calculate the 10th to 90th interpercentile range.

(3)

Simon wants to model another variable from the large data set for Beijing using a normal distribution.

(e) State two variables from the large data set for Beijing that are **not** suitable to be modelled by a normal distribution. Give a reason for each answer.

(2)

DO NOT WRITE IN THIS AREA
DO NOT WRITE IN THIS AREA
DO NOT WRITE IN THIS AREA

DO NOT WRITE IN THIS AREA

DO NOT WRITE IN THIS AREA

DO NOT WRITE IN THIS AREA

Question 2 continued

Turn over for a spare grid if you need to redraw your box plot.

Question 2 continued

DO NOT WRITE IN THIS AREA

DO NOT WRITE IN THIS AREA

DO NOT WRITE IN THIS AREA

Question 2 continued

Only use this grid if you need to redraw your box plot.

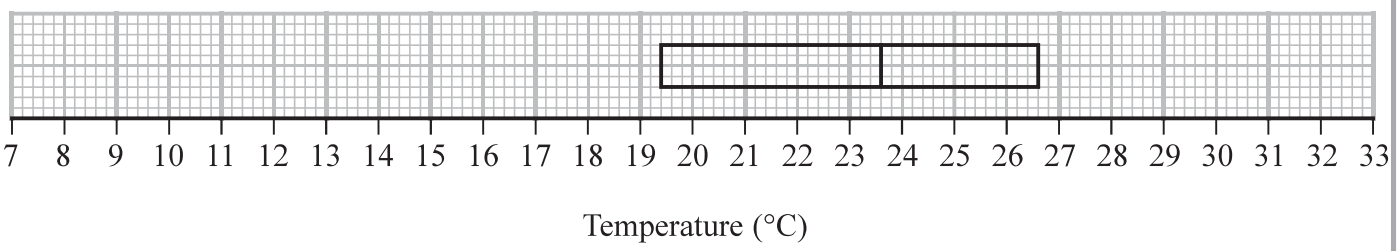

(Total for Question 2 is 11 marks)

DO NOT WRITE IN THIS AREA
DO NOT WRITE IN THIS AREA
DO NOT WRITE IN THIS AREA

3. Barbara is investigating the relationship between average income (GDP per capita), x US dollars, and average annual carbon dioxide (CO_2) emissions, y tonnes, for different countries.

She takes a random sample of 24 countries and finds the product moment correlation coefficient between average annual CO_2 emissions and average income to be 0.446

(a) Stating your hypotheses clearly, test, at the 5% level of significance, whether or not the product moment correlation coefficient for all countries is greater than zero.

(3)

Barbara believes that a non-linear model would be a better fit to the data.
She codes the data using the coding $m = \log_{10}x$ and $c = \log_{10}y$ and obtains the model $c = -1.82 + 0.89m$

The product moment correlation coefficient between c and m is found to be 0.882

(b) Explain how this value supports Barbara's belief.

(1)

(c) Show that the relationship between y and x can be written in the form $y = ax^n$ where a and n are constants to be found.

(5)

DO NOT WRITE IN THIS AREA
DO NOT WRITE IN THIS AREA
DO NOT WRITE IN THIS AREA

DO NOT WRITE IN THIS AREA

DO NOT WRITE IN THIS AREA

DO NOT WRITE IN THIS AREA

Question 3 continued

Question 3 continued

DO NOT WRITE IN THIS AREA
DO NOT WRITE IN THIS AREA
DO NOT WRITE IN THIS AREA

DO NOT WRITE IN THIS AREA

DO NOT WRITE IN THIS AREA

DO NOT WRITE IN THIS AREA

Question 3 continued

(Total for Question 3 is 9 marks)

4. Magali is studying the mean total cloud cover, in oktas, for Leuchars in 1987 using data from the large data set. The daily mean total cloud cover for all 184 days from the large data set is summarised in the table below.

Daily mean total cloud cover (oktas)	0	1	2	3	4	5	6	7	8
Frequency (number of days)	0	1	4	7	10	30	52	52	28

One of the 184 days is selected at random.

(a) Find the probability that it has a daily mean total cloud cover of 6 or greater.

(1)

Magali is investigating whether the daily mean total cloud cover can be modelled using a binomial distribution.

She uses the random variable X to denote the daily mean total cloud cover and believes that $X \sim \mathrm{B}(8, 0.76)$

Using Magali's model,

(b) (i) find $\mathrm{P}(X \geqslant 6)$

(2)

(ii) find, to 1 decimal place, the expected number of days in a sample of 184 days with a daily mean total cloud cover of 7

(2)

(c) Explain whether or not your answers to part (b) support the use of Magali's model.

(1)

There were 28 days that had a daily mean total cloud cover of 8
For these 28 days the daily mean total cloud cover for the **following** day is shown in the table below.

Daily mean total cloud cover (oktas)	0	1	2	3	4	5	6	7	8
Frequency (number of days)	0	0	1	1	2	1	5	9	9

(d) Find the proportion of these days when the daily mean total cloud cover was 6 or greater.

(1)

(e) Comment on Magali's model in light of your answer to part (d).

(2)

DO NOT WRITE IN THIS AREA
DO NOT WRITE IN THIS AREA
DO NOT WRITE IN THIS AREA

DO NOT WRITE IN THIS AREA

DO NOT WRITE IN THIS AREA

DO NOT WRITE IN THIS AREA

Question 4 continued

Question 4 continued

DO NOT WRITE IN THIS AREA

DO NOT WRITE IN THIS AREA

DO NOT WRITE IN THIS AREA

DO NOT WRITE IN THIS AREA

DO NOT WRITE IN THIS AREA

DO NOT WRITE IN THIS AREA

Question 4 continued

(Total for Question 4 is 9 marks)

5. A machine puts liquid into bottles of perfume. The amount of liquid put into each bottle, D ml, follows a normal distribution with mean 25 ml

Given that 15% of bottles contain less than 24.63 ml

(a) find, to 2 decimal places, the value of k such that $P(24.63 < D < k) = 0.45$

(5)

A random sample of 200 bottles is taken.

(b) Using a normal approximation, find the probability that fewer than half of these bottles contain between 24.63 ml and k ml

(3)

The machine is adjusted so that the standard deviation of the liquid put in the bottles is now 0.16 ml

Following the adjustments, Hannah believes that the mean amount of liquid put in each bottle is less than 25 ml

She takes a random sample of 20 bottles and finds the mean amount of liquid to be 24.94 ml

(c) Test Hannah's belief at the 5% level of significance.
You should state your hypotheses clearly.

(5)

DO NOT WRITE IN THIS AREA
DO NOT WRITE IN THIS AREA
DO NOT WRITE IN THIS AREA

DO NOT WRITE IN THIS AREA

DO NOT WRITE IN THIS AREA

DO NOT WRITE IN THIS AREA

Question 5 continued

Question 5 continued

(Total for Question 5 is 13 marks)

TOTAL FOR STATISTICS IS 50 MARKS

DO NOT WRITE IN THIS AREA
DO NOT WRITE IN THIS AREA
DO NOT WRITE IN THIS AREA

Please check the examination details below before entering your candidate information

Candidate surname	Other names

Pearson Edexcel Level 3 GCE

Centre Number | Candidate Number

Friday 14 June 2019

Afternoon | Paper Reference **9MA0-32**

Mathematics

Advanced
Paper 32: Mechanics

You must have:
Mathematical Formulae and Statistical Tables, calculator

Total Marks

Candidates may use any calculator allowed by Pearson regulations. Calculators must not have the facility for symbolic algebra manipulation, differentiation and integration, or have retrievable mathematical formulae stored in them.

Instructions

- Use **black** ink or ball-point pen.
- If pencil is used for diagrams/sketches/graphs it must be dark (HB or B).
- **Fill in the boxes** at the top of this page with your name, centre number and candidate number.
- Answer **all** questions and ensure that your answers to parts of questions are clearly labelled.
- Answer the questions in the spaces provided – *there may be more space than you need.*
- You should show sufficient working to make your methods clear. Answers without working may not gain full credit.
- Answers should be given to three significant figures unless otherwise stated.

Information

- A booklet 'Mathematical Formulae and Statistical Tables' is provided.
- The total mark for this part of the examination is 50. There are 5 questions.
- The marks for **each** question are shown in brackets – *use this as a guide as to how much time to spend on each question.*
- Unless otherwise stated, whenever a value of g is required, take $g = 9.8\ \text{m s}^{-2}$ and give your answer to either 2 significant figures or 3 significant figures.

Advice

- Read each question carefully before you start to answer it.
- Try to answer every question.
- Check your answers if you have time at the end.

Turn over

©2019 Pearson Education Ltd.
1/1/1/1/C2/1/

P 6 3 3 5 9 A 0 1 2 0

Pearson

Answer ALL questions. Write your answers in the spaces provided.

1. [*In this question position vectors are given relative to a fixed origin O*]

At time t seconds, where $t \geqslant 0$, a particle, P, moves so that its velocity $\mathbf{v}\,\mathrm{m\,s^{-1}}$ is given by

$$\mathbf{v} = 6t\mathbf{i} - 5t^{\frac{3}{2}}\mathbf{j}$$

When $t = 0$, the position vector of P is $(-20\mathbf{i} + 20\mathbf{j})\,\mathrm{m}$.

(a) Find the acceleration of P when $t = 4$

(3)

(b) Find the position vector of P when $t = 4$

(3)

DO NOT WRITE IN THIS AREA
DO NOT WRITE IN THIS AREA
DO NOT WRITE IN THIS AREA

DO NOT WRITE IN THIS AREA

DO NOT WRITE IN THIS AREA

DO NOT WRITE IN THIS AREA

Question 1 continued

(Total for Question 1 is 6 marks)

2. A particle, P, moves with constant acceleration $(2\mathbf{i} - 3\mathbf{j})\,\mathrm{m\,s^{-2}}$

At time $t = 0$, the particle is at the point A and is moving with velocity $(-\mathbf{i} + 4\mathbf{j})\,\mathrm{m\,s^{-1}}$

At time $t = T$ seconds, P is moving in the direction of vector $(3\mathbf{i} - 4\mathbf{j})$

(a) Find the value of T.

(4)

At time $t = 4$ seconds, P is at the point B.

(b) Find the distance AB.

(4)

DO NOT WRITE IN THIS AREA
DO NOT WRITE IN THIS AREA
DO NOT WRITE IN THIS AREA

DO NOT WRITE IN THIS AREA

DO NOT WRITE IN THIS AREA

DO NOT WRITE IN THIS AREA

Question 2 continued

(Total for Question 2 is 8 marks)

3.

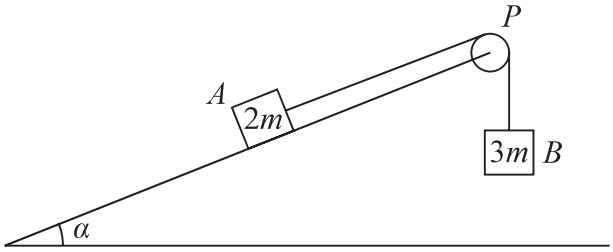

Figure 1

Two blocks, A and B, of masses $2m$ and $3m$ respectively, are attached to the ends of a light string.

Initially A is held at rest on a fixed rough plane.

The plane is inclined at angle α to the horizontal ground, where $\tan\alpha = \frac{5}{12}$

The string passes over a small smooth pulley, P, fixed at the top of the plane.

The part of the string from A to P is parallel to a line of greatest slope of the plane. Block B hangs freely below P, as shown in Figure 1.

The coefficient of friction between A and the plane is $\frac{2}{3}$

The blocks are released from rest with the string taut and A moves up the plane.

The tension in the string immediately after the blocks are released is T.

The blocks are modelled as particles and the string is modelled as being inextensible.

(a) Show that $T = \frac{12mg}{5}$

(8)

After B reaches the ground, A continues to move up the plane until it comes to rest before reaching P.

(b) Determine whether A will remain at rest, carefully justifying your answer.

(2)

(c) Suggest two refinements to the model that would make it more realistic.

(2)

DO NOT WRITE IN THIS AREA
DO NOT WRITE IN THIS AREA
DO NOT WRITE IN THIS AREA

DO NOT WRITE IN THIS AREA

DO NOT WRITE IN THIS AREA

DO NOT WRITE IN THIS AREA

Question 3 continued

Question 3 continued

DO NOT WRITE IN THIS AREA

DO NOT WRITE IN THIS AREA

DO NOT WRITE IN THIS AREA

DO NOT WRITE IN THIS AREA

DO NOT WRITE IN THIS AREA

DO NOT WRITE IN THIS AREA

Question 3 continued

(Total for Question 3 is 12 marks)

4.

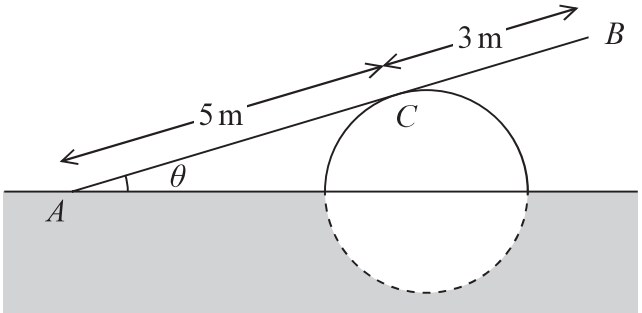

Figure 2

A ramp, AB, of length 8 m and mass 20 kg, rests in equilibrium with the end A on rough horizontal ground.

The ramp rests on a smooth solid cylindrical drum which is partly under the ground. The drum is fixed with its axis at the same horizontal level as A.

The point of contact between the ramp and the drum is C, where $AC = 5$ m, as shown in Figure 2.

The ramp is resting in a vertical plane which is perpendicular to the axis of the drum, at an angle θ to the horizontal, where $\tan\theta = \frac{7}{24}$

The ramp is modelled as a uniform rod.

(a) Explain why the reaction from the drum on the ramp at point C acts in a direction which is perpendicular to the ramp.

(1)

(b) Find the magnitude of the resultant force acting on the ramp at A.

(9)

The ramp is still in equilibrium in the position shown in Figure 2 but the ramp is not now modelled as being uniform.

Given that the centre of mass of the ramp is assumed to be closer to A than to B,

(c) state how this would affect the magnitude of the normal reaction between the ramp and the drum at C.

(1)

DO NOT WRITE IN THIS AREA
DO NOT WRITE IN THIS AREA
DO NOT WRITE IN THIS AREA

DO NOT WRITE IN THIS AREA

DO NOT WRITE IN THIS AREA

DO NOT WRITE IN THIS AREA

Question 4 continued

Question 4 continued

DO NOT WRITE IN THIS AREA

DO NOT WRITE IN THIS AREA

DO NOT WRITE IN THIS AREA

DO NOT WRITE IN THIS AREA

DO NOT WRITE IN THIS AREA

DO NOT WRITE IN THIS AREA

Question 4 continued

(Total for Question 4 is 11 marks)

5.

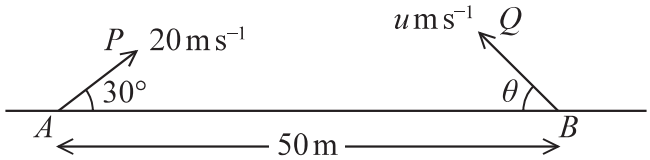

Figure 3

The points A and B lie 50 m apart on horizontal ground.

At time $t = 0$ two small balls, P and Q, are projected in the vertical plane containing AB.

Ball P is projected from A with speed $20\,\text{m s}^{-1}$ at 30° to AB.

Ball Q is projected from B with speed $u\,\text{m s}^{-1}$ at angle θ to BA, as shown in Figure 3.

At time $t = 2$ seconds, P and Q collide.

Until they collide, the balls are modelled as particles moving freely under gravity.

(a) Find the velocity of P at the instant before it collides with Q.

(6)

(b) Find

(i) the size of angle θ,

(ii) the value of u.

(6)

(c) State one limitation of the model, other than air resistance, that could affect the accuracy of your answers.

(1)

DO NOT WRITE IN THIS AREA
DO NOT WRITE IN THIS AREA
DO NOT WRITE IN THIS AREA

DO NOT WRITE IN THIS AREA

DO NOT WRITE IN THIS AREA

DO NOT WRITE IN THIS AREA

Question 5 continued

Question 5 continued

DO NOT WRITE IN THIS AREA

DO NOT WRITE IN THIS AREA

DO NOT WRITE IN THIS AREA

DO NOT WRITE IN THIS AREA

DO NOT WRITE IN THIS AREA

DO NOT WRITE IN THIS AREA

Question 5 continued

Question 5 continued

DO NOT WRITE IN THIS AREA

DO NOT WRITE IN THIS AREA

DO NOT WRITE IN THIS AREA

DO NOT WRITE IN THIS AREA

DO NOT WRITE IN THIS AREA

DO NOT WRITE IN THIS AREA

Question 5 continued

(Total for Question 5 is 13 marks)

TOTAL FOR MECHANICS IS 50 MARKS

BLANK PAGE

DO NOT WRITE IN THIS AREA
DO NOT WRITE IN THIS AREA
DO NOT WRITE IN THIS AREA